CUST/PROJECT	APPROVED BY	COLOUR STANDARD COLOUR B.O.W	
JOB NUMBER	SIGNED BY	VALVES REQ	Y / N
MODEL CEILING	DATE		

150	300	450	600

MODEL	150	300	450	600
"L"	900	1100	1500	1800
"C"	530	730	1130	1430
"H"	HEATING UNITS - 240			
	COOLING UNITS - 260			

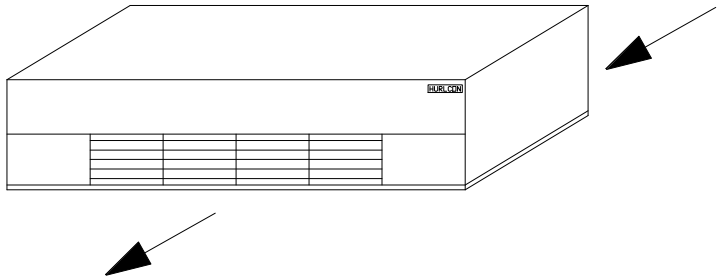

L/HAND COIL AND DRAIN

☐ TICK

R/HAND COIL AND DRAIN

☐ TICK

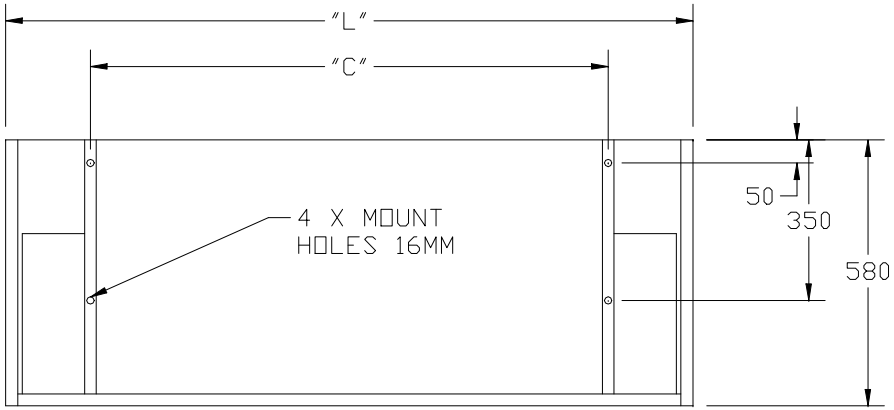

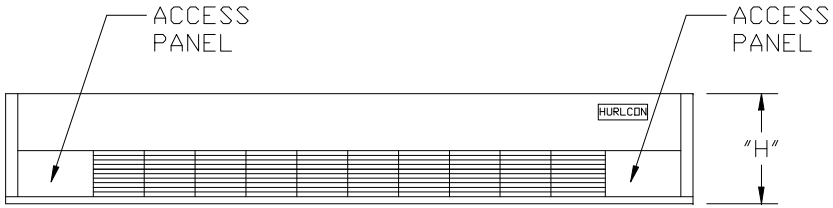

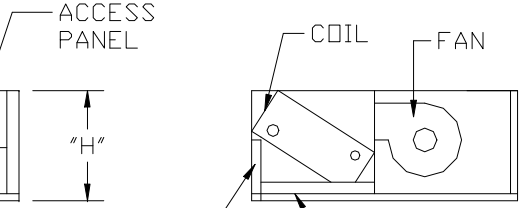

SUPPLY AIR GRILLE

CONDENSATE TRAY COOLING ONLY

NOTE: ELECTRICAL BOX IS OPPOSITE COIL AND DRAIN CONNECTION

REV	CHANGE DESCRIPTION	DATE	BY
–	–	–	–

UNLESS OTHERWISE STATED ALL TOLERANCES +/-0.5MM

DRAFTING STANDARD AS 1100

© HURLCON P/L Ph 9701 5166

THIS DRAWING AND THE INFORMATION IT CONTAINS MUST NOT BE DUPLICATED WITHOUT THE PERMISSION OF HURLCON P/L. ALL COPIES MUST BE RETURNED UPON REQUEST.

DRAWN BY: B BUTLER
DATE: 27/05/03
APPROVED: B BUTLER
DATE: 27/05/03

DWG NO: CEILING

DWG TITLE: FAN COIL DRAWING

SCALE: NTS

MATERIAL: –

SHT 1 OF 1

REV: 00